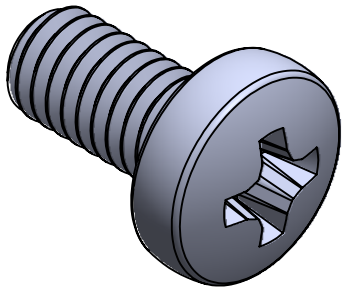

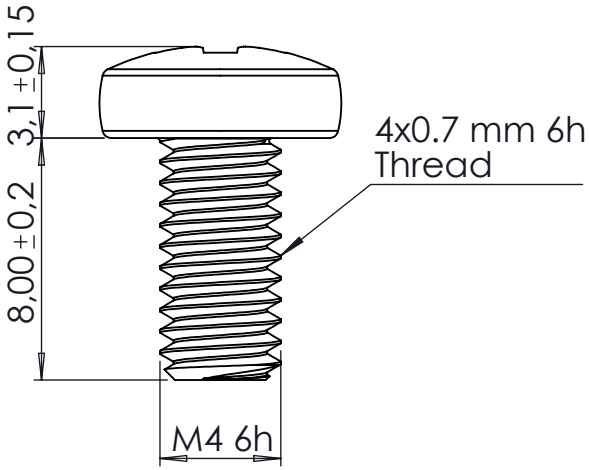

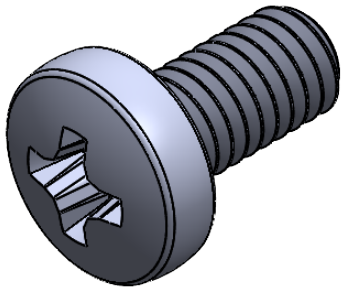

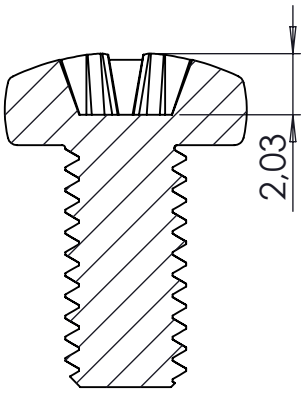

KESIT C-C

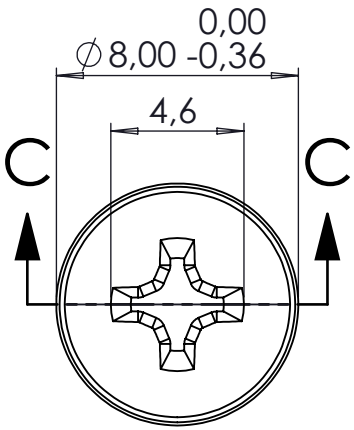

PH2

REV. NO	DATE	REVISED BY	DESCRIPTION OF CHANGE

ALTINKAYA
Electronic Enclosures & Components

www.altinkaya.com

Customer Name:			Customer Ref.:
Altınkaya Ref.: VD-340-8-0-M-D			Part Name : VD-340 M4 YSB Metric Screw
	NAME	DATE	Drawn From:
DRAWN	S.YESILOZ	14.06.2025	Material : Metallic A2F Cr+3 over 20Mn-B4
CHECKED	Y.YEL	14.06.2025	WEIGHT: g

DIMENSIONAL TOLERANCES UNLESS OTHERWISE SPECIFIED (DIN7168)	0,5-3mm	3-6mm	6-30mm	30-120mm	120-400mm	UNIT : mm Dimension (mm)
	±0,1	±0,1	±0,2	±0,3	±0,5	m (medium)

A4

SCALE:4:1 SHEET 1 OF 1